RGBW 4CH Controller

ISO9001:2008

This RGBW controller is a multifunctional LED Controller that is made to be used with RGB + One additional single color LED. With 15 light function keys and 20 lighting effects over 3 control modes, this controller has plenty of options for any user. With brightness and speed adjustment this controller is equipped with a variety of control functions. See the technical specifications below for the limitations of this product.

1. Technical Specs

Input Voltage	DC12V~DC24V
Max load current	6A/CH×4CH Max 24A
Max load power	288W/576W(12V/24V)
Changing mode	3 types 20 modes
Scale levels	1024×1024×1024
Working temperature	-30℃~55℃
Dimension	L170×W64×H30mm
Package Size	L172×W66×H52mm
Weight (G.W)	270g

2. Product dimension

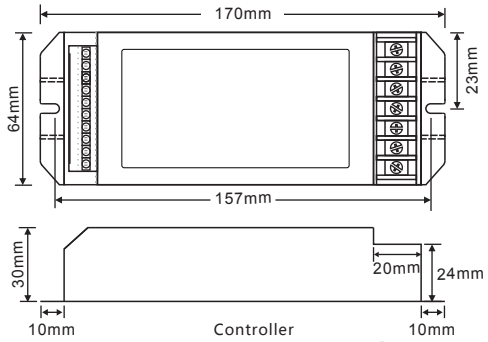

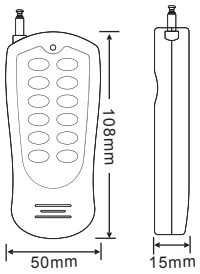

RF Remote

3. The Learning of the remote control

Long press the remote control ON/OFF key until the buzzer sounds, it is the state of learning the remote control. Then short press any buttons on the remote control in 3 seconds, the controlling between the remote control and the receiver is activated. Short press any buttons on the remote control after 3 seconds, the controlling between the remote control and the receiver is cancelled.

4. Operation Interface Instruction

(1) Detailed Key Functions

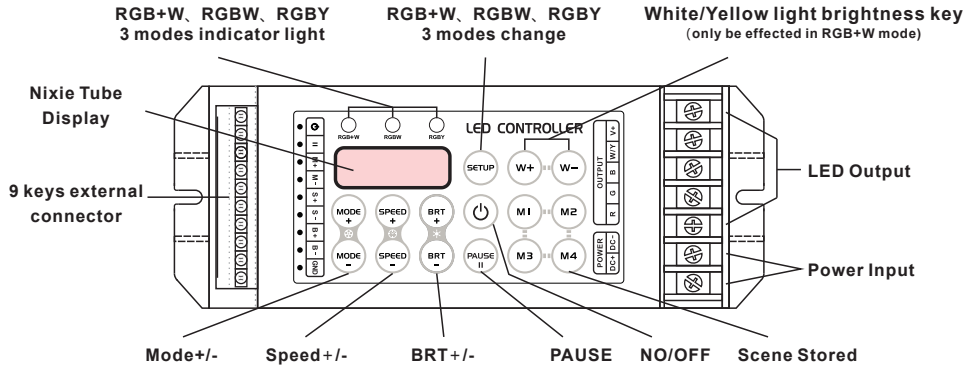

(2) Nixie Tube State Display

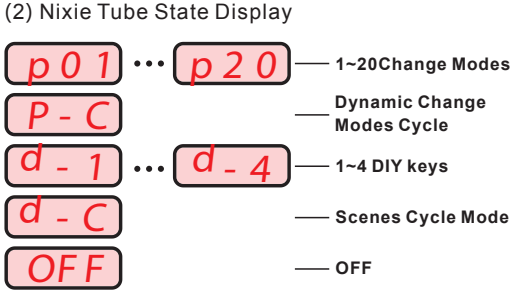

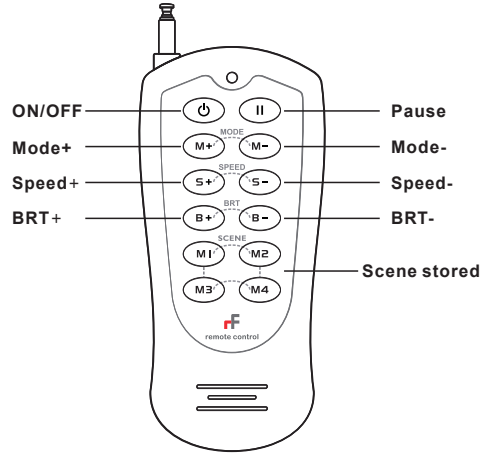

(3) Other Functions

1、ON/OFF：Long press to learn the remote control
2、PAUSE：Long press to turn on/off the buzzer
3、MODE+：Long press to dynamic change modes cycle
4、MODE-：Long press to 4 DIY modes cycle
5、SPEED+：Long press, all speed change is restored to default status.
6、SPEED-：Long press, the current change is restored to default status.
7、M1~M4：Scene mode operation distinguish RGB+W、RGBW、RGBY 3 modes, each mode has its own 4 scenes.

4. Tables of Changing Mode

1. RGB+W mode

No.	Mode	Description	No.	Mode	Description
1	Static Red + Static White	Brightness adjustable	11	7 Colors Strobe + Static White	Speed/brightness adjustable
2	Static Green + Static White	Brightness adjustable	12	Red Fade out and Fade in + Static White	Speed/brightness adjustable
3	Static Blue + Static White	Brightness adjustable	13	Green fade out and Fade in + Static White	Speed/brightness adjustable
4	Static Yellow + Static White	Brightness adjustable	14	Blue Fade out and Fade in + Static White	Speed/brightness adjustable
5	Static Purple + Static White	Brightness adjustable	15	Yellow Fade out and Fade in + Static White	Speed/brightness adjustable
6	Static Cyan + Static White	Brightness adjustable	16	Purple Fade out and Fade in + Static White	Speed/brightness adjustable
7	Static Mixed White + Static White	Brightness adjustable	17	Cyan Fade out and Fade in + Static White	Speed/brightness adjustable
8	RGB Skipping + Static White	Speed/brightness adjustable	18	White Fade out and Fade in + Static White	Speed/brightness adjustable
9	7 Colors Skipping + Static White	Speed/brightness adjustable	19	RGB Color Smooth + Static White	Speed/brightness adjustable
10	RGB Strobe + Static White	Speed/brightness adjustable	20	Full-color Smooth + Static White	Speed/brightness adjustable

2. RGBW mode

No.	Mode	Description	No.	Mode	Description
1	Static Red	Brightness adjustable	11	7 Colors Strobe	Speed/brightness adjustable
2	Static Green	Brightness adjustable	12	Red + White Fade out and Fade in	Speed/brightness adjustable
3	Static Blue	Brightness adjustable	13	Green + White fade out and Fade in	Speed/brightness adjustable
4	Static Yellow	Brightness adjustable	14	Blue + White Fade out and Fade in	Speed/brightness adjustable
5	Static Purple	Brightness adjustable	15	Yellow + White Fade out and Fade in	Speed/brightness adjustable
6	Static Cyan	Brightness adjustable	16	Purple + White Fade out and Fade in	Speed/brightness adjustable
7	Static White	Brightness adjustable	17	Cyan + White Fade out and Fade in	Speed/brightness adjustable
8	RGBW Skipping	Speed/brightness adjustable	18	Mixed White + White Fade out and Fade in	Speed/brightness adjustable
9	7 Colors Skipping	Speed/brightness adjustable	19	RGBW Color Smooth	Speed/brightness adjustable
10	RGBW Strobe	Speed/brightness adjustable	20	Full-color Smooth	Speed/brightness adjustable

3. RGBY mode

No.	Mode	Description	No.	Mode	Description
1	Static Red	Brightness adjustable	11	7 Colors Strobe	Speed/brightness adjustable
2	Static Green	Brightness adjustable	12	Red + Yellow Fade out and Fade in	Speed/brightness adjustable
3	Static Blue	Brightness adjustable	13	Green + Yellow fade out and Fade in	Speed/brightness adjustable
4	Static Yellow	Brightness adjustable	14	Blue + Yellow Fade out and Fade in	Speed/brightness adjustable
5	Static Purple	Brightness adjustable	15	White + Yellow Fade out and Fade in	Speed/brightness adjustable
6	Static Cyan	Brightness adjustable	16	Purple + Yellow Fade out and Fade in	Speed/brightness adjustable
7	Static White	Brightness adjustable	17	Cyan + Yellow Fade out and Fade in	Speed/brightness adjustable
8	RGBW Skipping	Speed/brightness adjustable	18	Mixed Yellow + Yellow Fade out and Fade in	Speed/brightness adjustable
9	7 Colors Skipping	Speed/brightness adjustable	19	RGBY Color Smooth	Speed/brightness adjustable
10	RGBW Strobe	Speed/brightness adjustable	20	Full-color Smooth	Speed/brightness adjustable

1. RGBW or RGB+W mode

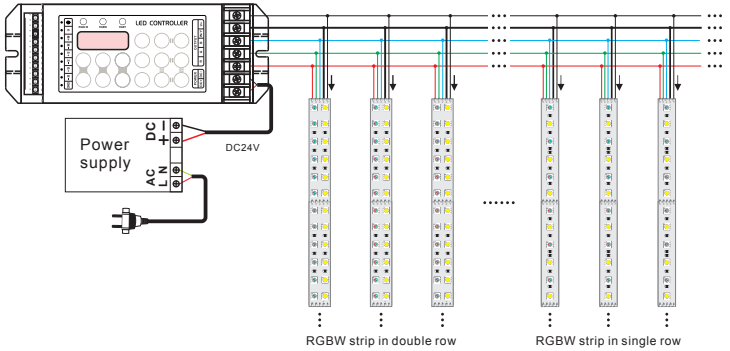

2. RGBY mode

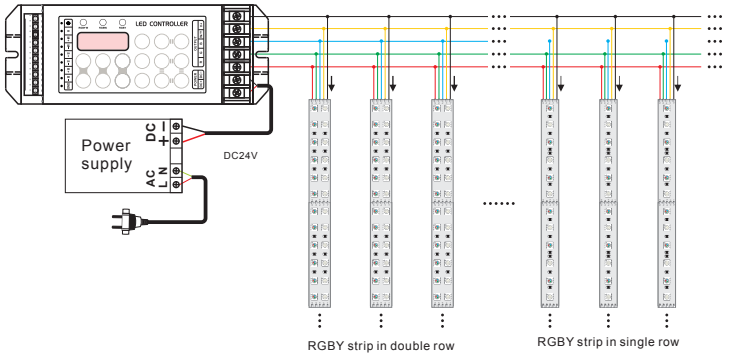

6. Attention

1. The product shall be installed and serviced by a qualified person.
2. This product is non-waterproof. Please avoid the sun and rain. When installed outdoors please ensure it is mounted in a water proof enclosure.
3. Good heat dissipation will prolong the working life of the controller. Please ensure good ventilation.
4. Please check if the output voltage of any LED power supplies used comply with the working voltage of the product.
5. Please ensure that adequate sized cable is used from the controller to the LED lights to carry the current. Please also ensure that the cable is secured tightly in the connector to avoid the accidents due to overheat and poor contact on the wire.
6. Ensure all wire connections and polarities are correct before applying power to avoid any damages to the LED lights.
7. If a fault occurs please return the product to your supplier. Do not attempt to fix this product by yourself.

7. Warranty Agreement

1. We provide lifelong technical assistance with this product:
   - A 1 year warranty is given from the date of purchase. The warranty is for free repair or replacement and covers manufacturing faults only.
   - For faults beyond the 1 year warranty we reserve the right to charge for time and parts.
2. Warranty exclusions below:
   - Any man-made damages caused from improper operation, or connecting to excess voltage and overloading.
   - The product appears to have excessive physical damage.
   - Damage due to natural disasters and force majeure.
   - Warranty label, fragile label and unique barcode label have been damaged.
   - The product has been replaced by a brand new product.
3. Repair or replacement as provided under this warranty is the exclusive remedy to the customer. Ecolocity LED shall not be liable for any incidental or consequential damages for breach of any stipulation in this warranty.