Specification sheet - KOZMA Extrusion
ref. number EX-KL1-DM2

PRODUCT DESCRIPTION

KOZMA extrusion can be applied indoor for drywall ceilings. It allows for creation of interesting compositions of narrow lines of light in the surfaces of walls and ceilings. Covering aluminium elements with plaster leaves only an elegant line of cover.

Extrusion comes with an additional working cover. It is inserted into the groove with the use of mounting glue (producer suggests GS 20 CEKOL) in a way that its wings adhere tightly to the surface of the ceiling. Then the net for covering with plaster is pasted on the wings and the plaster is applied and grinded. The base edge of the extrusion must remain untouched. The layer of paint is added next and the working cover is removed. The LED are pasted next and the final cover inserted.

- Narrow line of light
- Profile flush with the ceiling or wall surface
- Componentes de aluminio invisibleInvisible aluminum components

Fill empty fields

Product nr.	
Fixture type	
Company	
Job name	
Date	

TECHNICAL SPECIFICATION
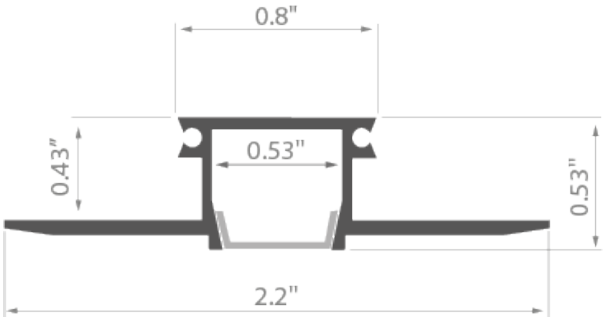
EX-KL1-DM2-1M	Non anodized (raw)	39.4''
EX-KL1-DM2-2M	Non anodized (raw)	78.75''