LN-DX-NEA-FH-END

Fast Connector of neon strip

Application

- Apply to our Flat Top Side Emitting Neon Flex.
- For Capping LED Flexible Strip Light Runs.

Features

- Dimension:41.7 x 17.7 x 15.9mm (1.64 × 0.697 x 0.626in)
- Operating temperature: -20℃ ~ +40℃(-4℉~ +104℉)
- Storage temperature: 0℃ ~ +60℃(32℉~ +140℉)
- Humidity: 30-70%RH
- Ingress protection rating: IP65
- Color：Transparent+white
- Applied to the 8mm width neon strip.

Dimension Drawing

Unit：mm　　Tolerance：±0.2mm

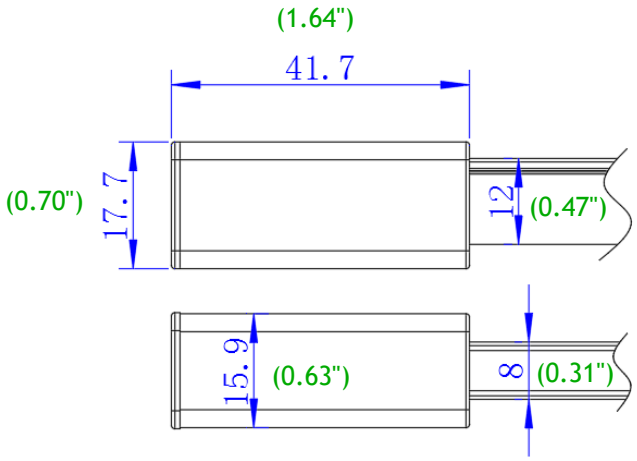

Installation guide:

The connection method of the strip：

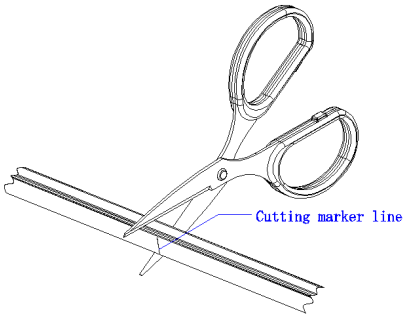

①

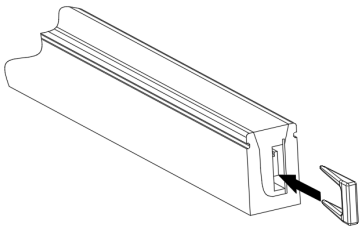

②

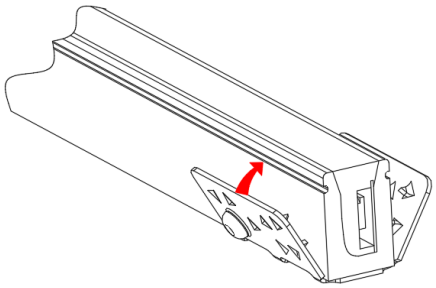

③

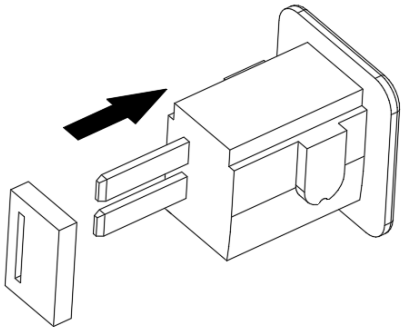

④

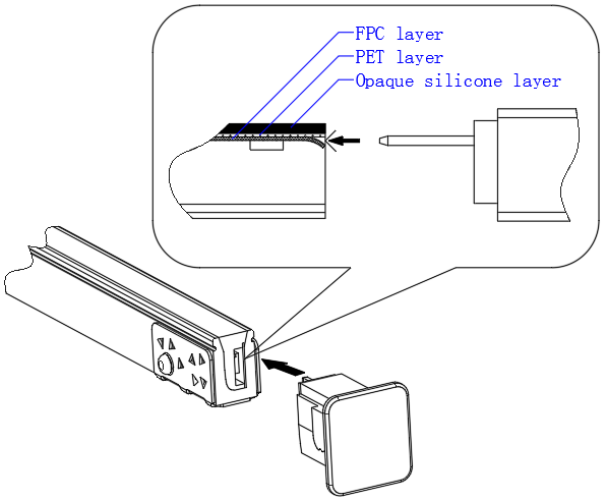

⑤

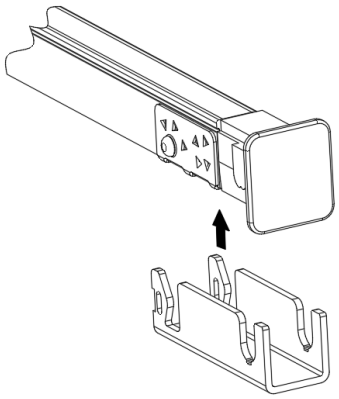

⑥

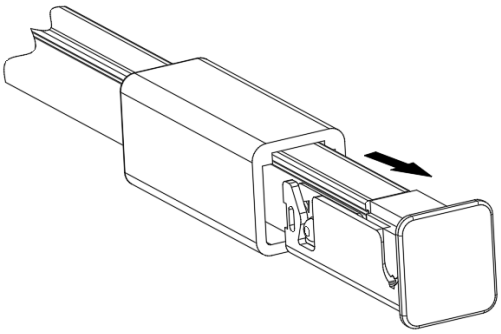

⑦

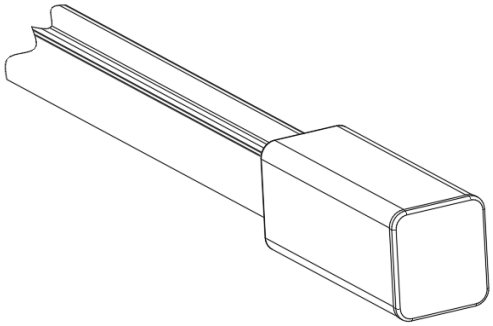

⑧

CAUTIONS

1. The connector should only be applied to the designated products of our company；
2. To guarantee waterproof effectiveness, every part of assembly should be used in install；
3. Due to the sharp structure of the connector, care must be taken during installation to avoid injury；
4. The pulling force between the input wires and the connector ≤3KG.

Warning

- Please note the careful operation, in the power source connection's situation, do not touch the alternating current supply in order to avoid any body damage.
- The product can not be connected to the high voltage line.
- Installing the product in the appropriate environment as far as possible.

** If you do not follow the above "Cautions" to operate and result in damaging the product, the factory will not accept maintenance and return.